RoHS COMPLIANT

CE

TM-STPP-24-2-R2500

REV: A

Dimension Unit = mm

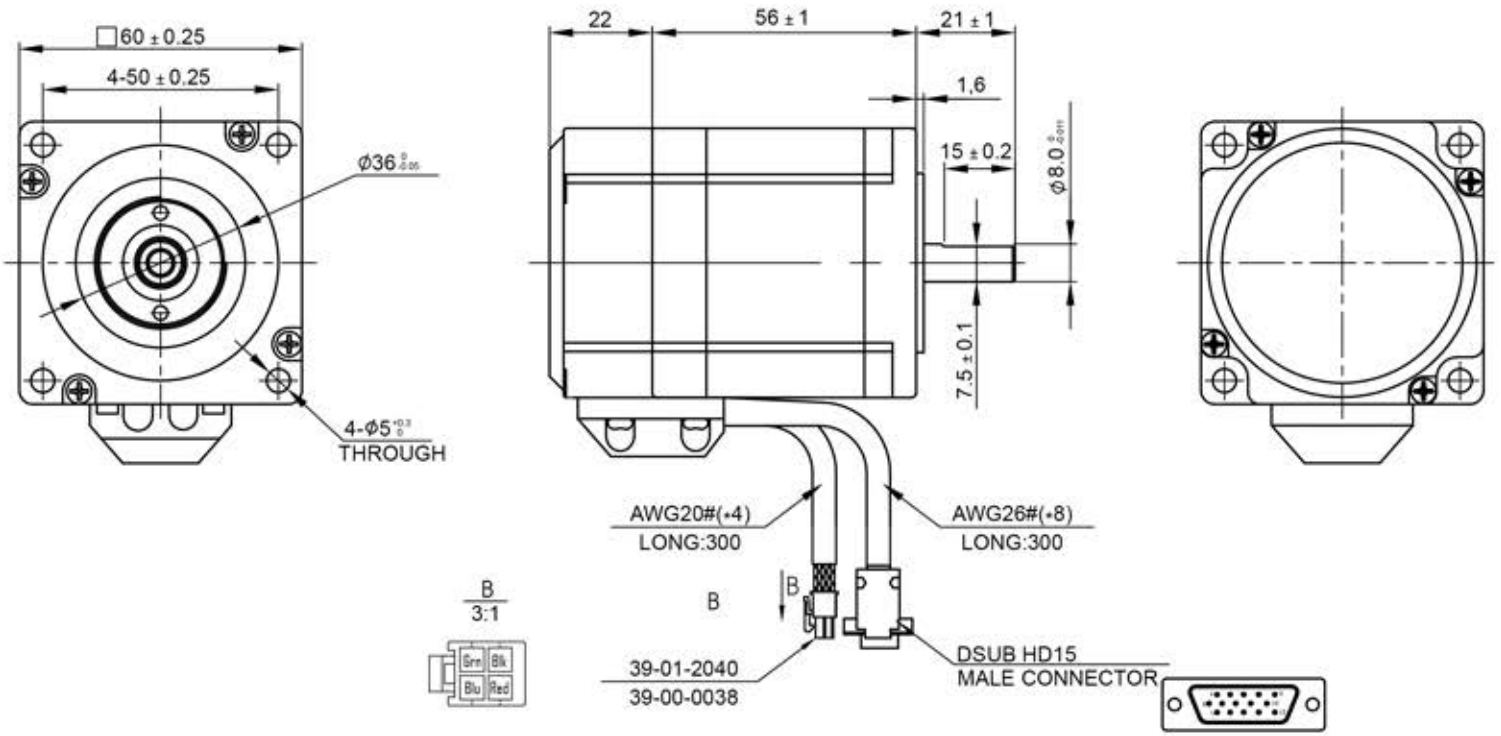

Encoder Control (2500CPR)

1	Black	EGED
2	Red	+5VCC
3	Blue	EA+
4	Blue/White	EA-
5	Orange	EB+
6	Orange/White	EB-
7	Green/White	EZ-
8	Green	EZ+

Motor Specification

Number of Phase	2
Basic Step Angle	1.8°
Positional Accuracy (No-Load)	±0.09° Max
Rated Current (Phase)	3.0A
Resitanc (Phase) at 20°C	0.76Ω±10%
Inductance (Phase) at 1KHz, 1V rms	2.3mH±20%
Holding Torque	1.3N·m
Rotor Inertia	≈340g·cm²
Mass	≈0.8Kg
Radial Play (Max)	0.025mm (Load 450g)
Axial Play (Max)	0.075mm (Load 920g)
Duty	Continuous
Dielectric Strength	500V A.C
Insulation Resistance	100MΩ Min
Insulation Class (UL)	B
Temperature Rise	80K Max
Life (Hours)	5000 Min
Operation Ambient Temperature	0°C~+70°C
Operation Ambient Humidity	20%RH~90%RH
Storage Ambient Temperature	-20°C~+70°C
Storage Ambient Humidity	15%RH~95%RH

Wiring Diagram

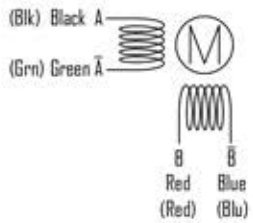

Phase Sequence (2 Phase Exciting)

Step	A	B	Ā	B̄
1	+	+	-	-
2	-	+	+	-
3	-	-	+	+
4	+	-	-	+
5	+	+	-	-

CW ↓ ↑ CCW

Label Description

Arcus Servo Motion, Inc.

First Angle View

Edition	Revisions	Designe	Date			
F				Approved		
E						
D				Checked		
C						
B				Designed		
A						
				Drawn	JYY	2019.02.16

Material			
Finish			
Tolerance	±0.2	NO.	056127
Scale	1:2	Sheet	1/1